Annex B_ Staking Sheet

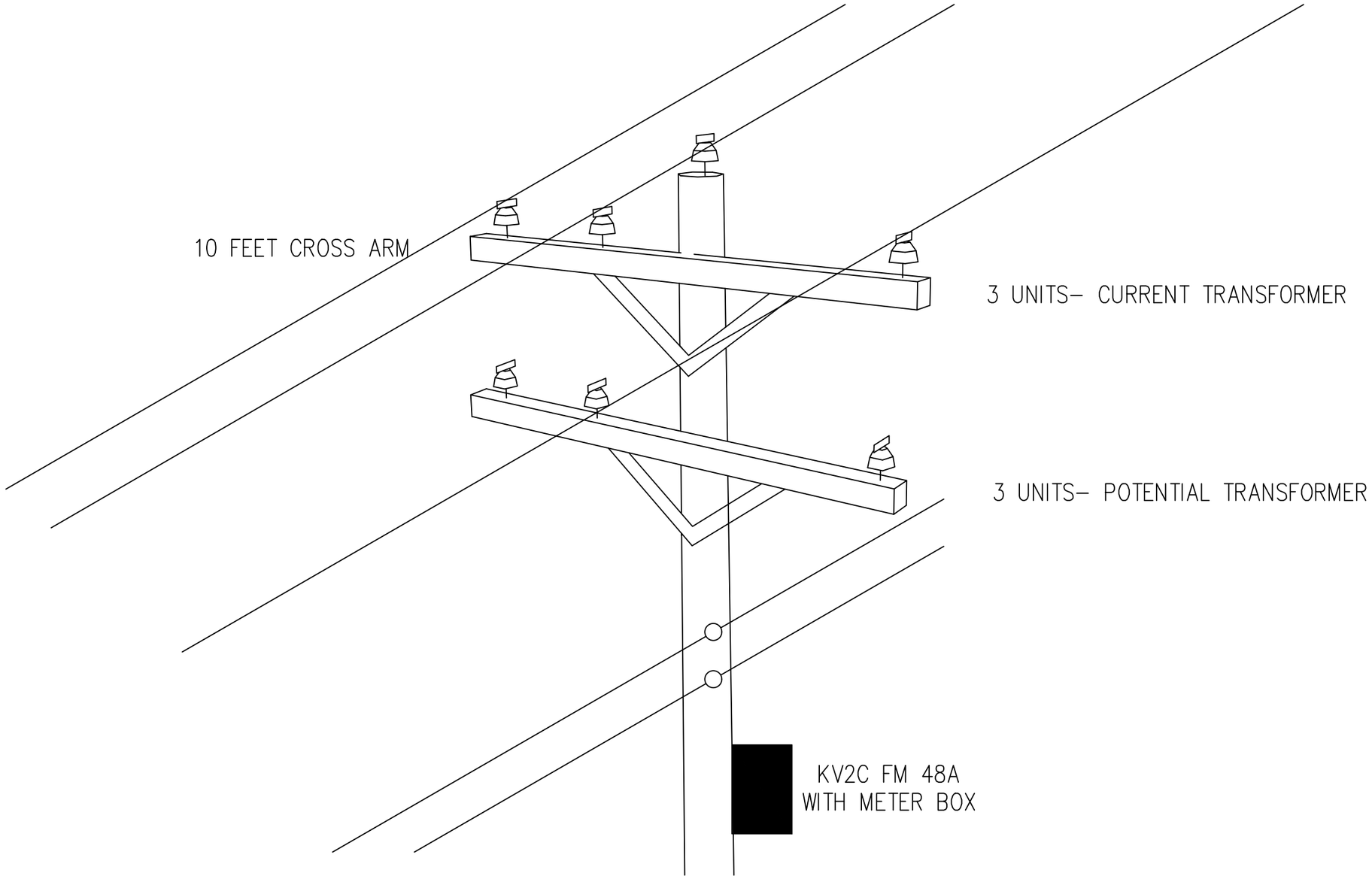

KALINGA STATE UNIVERSITY INFRASTRUCTURE DEPARTMENT BULANAO, TABUK CITY, KALINGA	Prepared By:	CADD BY	CHECKED BY	Professional Electrical Engineer	REVISION	DATE	DESCRIPTION	PROJECT TITLE	RECOMMENDING APPROVAL:	APPROVED BY:	SHEET CONTENT/S	SHEET NO.
	KSU INFRASTRUCTURE UNIT	PJDJ						PRIMARY METERING FOR KALINGA STATE UNIVERSITY MAIN CAMPUS	Engr. LOPE T. BUEN, Ph.D. DIRECTOR FOR PLANNING AND STRATEGY	EDUARDO T. BAGTANG, CPA, DBM KSU PRESIDENT	PROPOSED METERING POINT OF KSU	1
	REG. NO.	OWNERSHIP OF DOCUMENTS RA 2966- SECTION 33		REG. NO.				PROJECT LOCATION	ADDRESS	ADDRESS		PAGE NO.
	PTR. NO.	THESE DRAWINGS, AS INSTRUMENT OF PROFESSIONAL SERVICE IS A PROPERTY OF THE ARCHITECT AND AS SUCH CANNOT BE REPRODUCED,COPIED IN PART OR IN WHOLE WITHOUT PROPER AUTHORIZATION.		PTR. NO.				Bulanao, Tabuk City, Kalinga	Bulanao, Tabuk City, Kalinga	Bulanao, Tabuk City, Kalinga		2
	DATE			DATE								
	PLACE			PLACE								