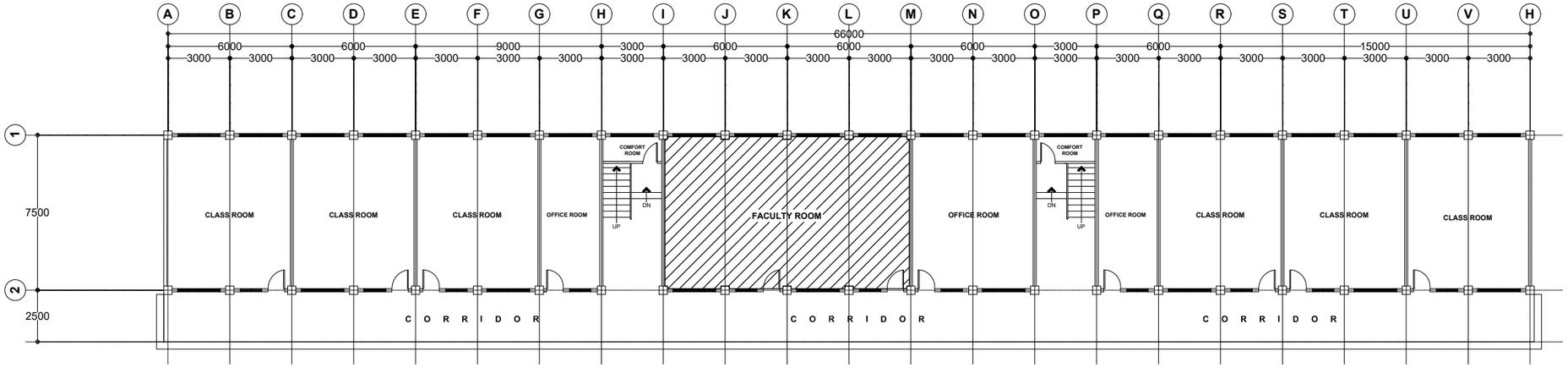

1 | A 1

HIGH SCHOOL BUILDING
GROUND FLOOR PLAN
SCALE: 1:40m

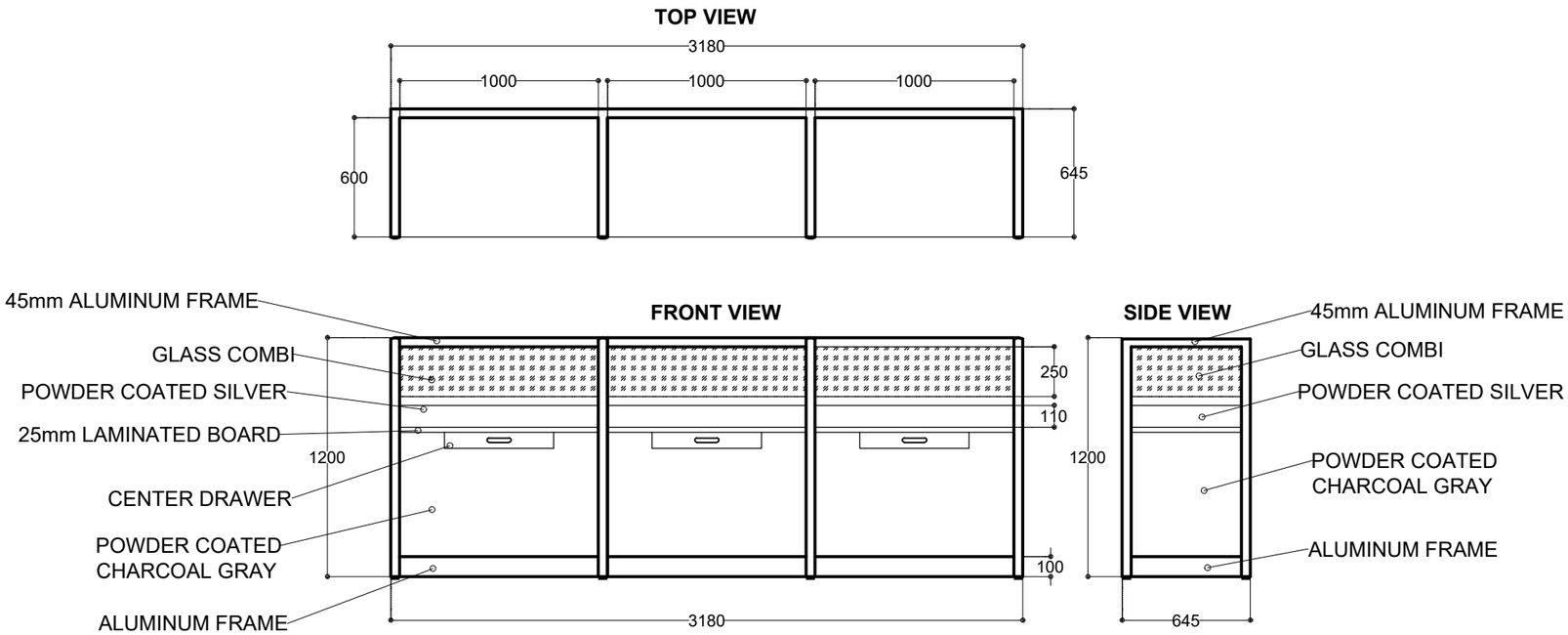

2 | A 1

WORK STATION DETAILS
SCALE: 1:30m

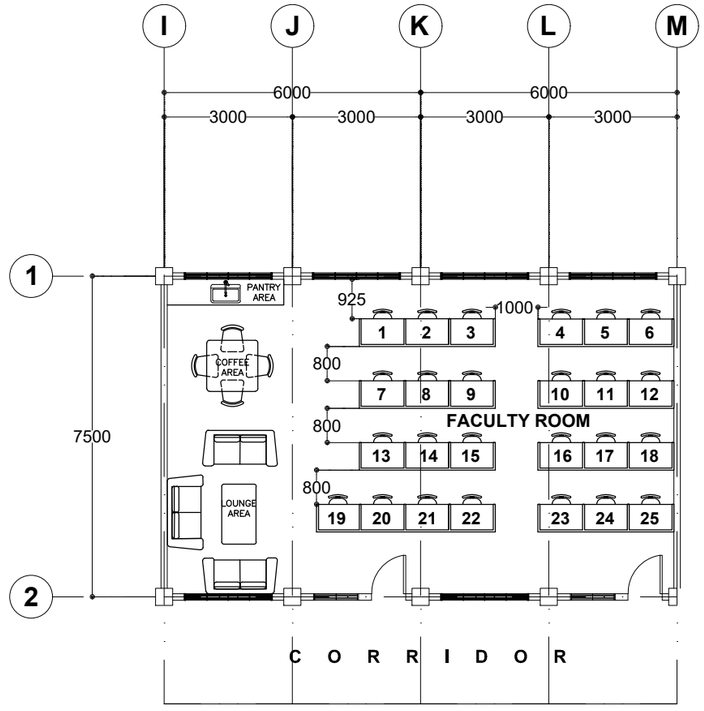

3 | A 1

WORK STATION LAYOUT
SCALE: 1:70m

*NOTE: Coffee area and lounge area furnitures are NOT included in the items to be procured and are only there for reference.

KALINGA STATE UNIVERSITY **INFRASTRUCTURE DEPARTMENT** BULANAO, TABUK CITY, KALINGA	ARCHITECT	CADD BY: BDW	CHECKED BY: Arch. DAVE D. OCNAT	REVIEWED BY: Engr. CHRISTIAN LOUIE B. ADORA, CHAIRMAN FOR PLANNING	NOTED BY: Dr. MARIA CYRILA C. BAWER, PRINCIPAL, HIGH SCHOOL	DESCRIPTION	PROJECT TITLE: FURNITURES AND FIXTURES HIGHSCHOOL BUILDING	RECOMMENDING APPROVAL: Engr. LOPE T. BUEN, Ph. D, DIRECTOR FOR PLANNING AND STRATEGY	APPROVED BY: EDUARDO T. BAGTANG, CPA,DBM, KSU PRESIDENT	SHEET CONTENT/S	SHEET NO. A1
	REG. NO.	OWNERSHIP OF DOCUMENTS		REG. NO.	REVISIONS						PAGE NO.
	PTR. NO.	RA 9266- SECTION 33		PTR. NO.			Project Location:	Address:	Address:		1
	DATE	THESE DRAWINGS, AS INSTRUMENT OF PROFESSIONAL SERVICE IS A PROPERTY OF THE ARCHITECT AND AS SUCH CANNOT BE REPRODUCED,COPIED IN PART OR IN WHOLE WITHOUT PROPER AUTHORIZATION.		DATE			Bulanao, Tabuk City, Kalinga	Bulanao, Tabuk City, Kalinga	Bulanao, Tabuk City, Kalinga		
	PLACE			PLACE							